Rhyton

Jacuzzi Bathtub Faucets

Jacuzzi motor:

A completely isolated core with pump fan

Reinforced bathtub and jacuzzi:

Floor with five fiberglass layers

Sheet material:

Acrylic
- ACRYLIC
- ABS
- ACRYLIC

Antimicrobhial
Shining
antifungal

Body material:

Steel

Rhyton
Jacuzzi Bathtub Faucets

ریتون

Rhyton

وان جکوزی شیرآلات

در رویای خود غرق شوید ...

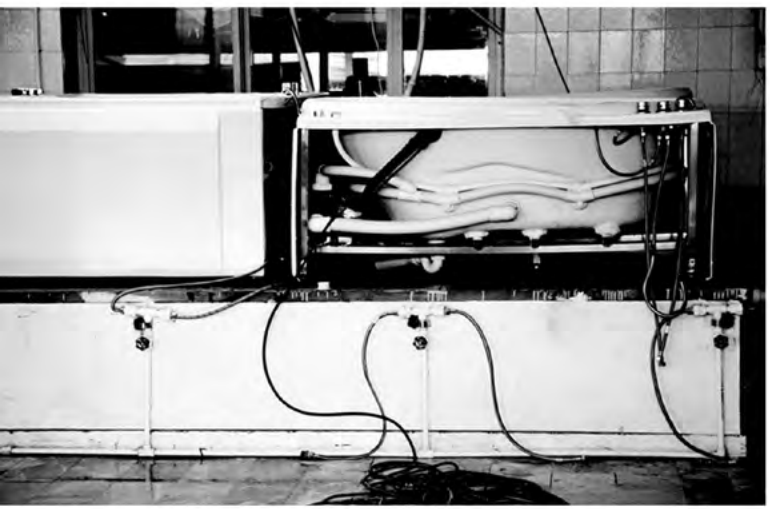

Though it's our best-selling line, we've updated every ,design bringing innovation to the RHYTON collection to make it even better

OUR STORY

شرکت ریتون در سال ۱۳۸۵ تاسیس و در طول سال ها فعالیت و تلاش قدم در راه رشد و ترقی گذارده تا به عنوان یکی از تولیدکنندگان برتر در زمینه تولید وان و جکوزی و شیرآلات بهداشتی دست یابد. نام ریتون RHYTON به معنای جام آب بوده و در سال ۱۳۸۹ طی علامت تجاری به نام آقای حمید فوادیان به ثبت رسید.

شرکت ریتون با توجه به سابقه طولانی در زمینه شیرآلات بهداشتی و قطعات کاهنده مصرف آب، جزء اولین شرکت های وارد کننده فلاشتانک توکار می باشد. که در ابتدا بصورت واردات از کشورهای مختلف فعالیت خود را آغاز و پس از اخذ تجربه و شناسایی بازار ایران و مذاکرات صورت گرفته، قدم در راه تولید نهاد. این شرکت در ابتدای مسیر در زمینه صنعت ساختمان، تولید وان و جکوزی و اتاق دوش فعالیت خود را آغاز نمود.

در سال ۱۳۹۵ باتوجه به بررسی و نیاز معماران داخلی مبنی بر استفاده از رنگ در طراحی داخلی و ایجاد فضایی مدرن، طی قراردادی با شرکت ویلروی اند باخ شرکت آلمانی، ورق هایی در رنگ بندی های زیبا و متفاوت خریداری و در خط تولید جدید شرکت ریتون، با ترکیب رنگ و چوب روانه بازار نمود.

در سال ۱۳۹۶ با در نظر گرفتن شرایط بازار و نیاز مصرف کنندگان به شیرآلات بهداشتی، نسبت به توسعه فضای کارخانه اقدام و مجوز تاسیس و استاندارد تولید شیرآلات بهداشتی اخذ شد. این مجموعه از کارشناسان و متخصصان برجسته و همچنین مدیرانی با سوابق روشن برای رسیدن به این هدف والا بهره جسته است. تجهیزات به کار رفته در این مجموعه از پیشرفته ترین تجهیزات مطابق با استانداردهای روز اروپا می باشد.

مجموعه ریتون به ارزش نوآوری اعتقاد راسخ داشته و بطور مداوم در حال سرمایه گذاری در تحقیق و توسعه تکنولوژیکی و همچنین در تکامل زیبایی محصول میباشد. توجه متمرکز بر کیفیت محصول ایرانی، باعث گردیده که کلیه مواد اولیه غیرقابل تولید در کشور ایران، از تولیدکنندگان معتبر اروپایی تامین گردد.

Technical Specifications

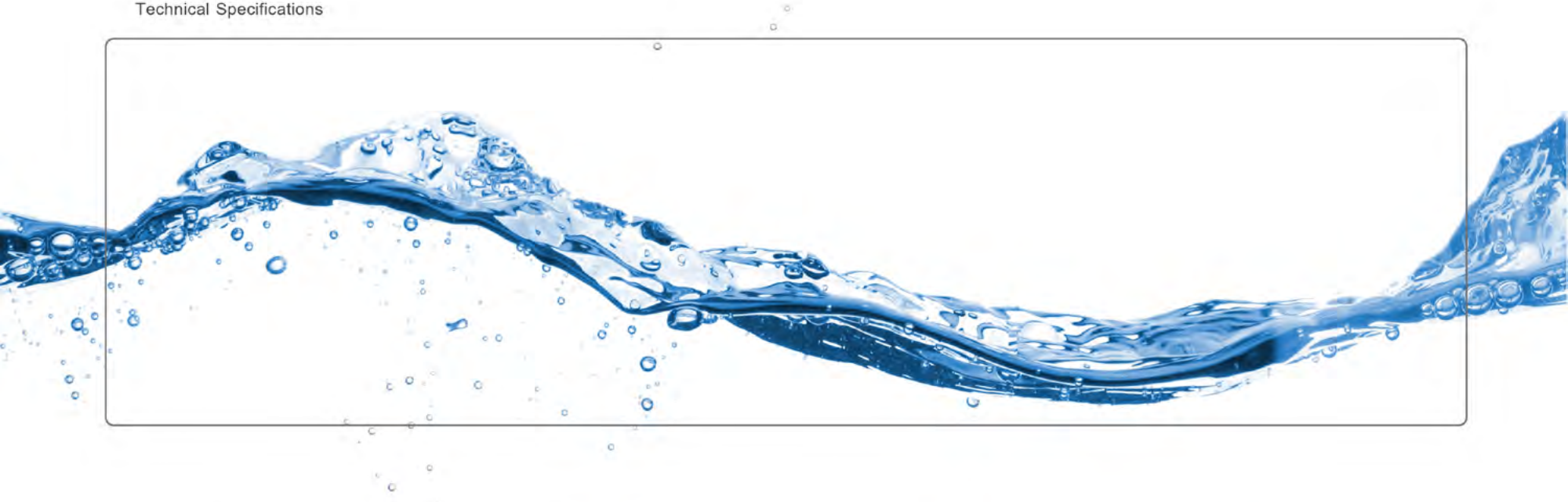

COLOR THERAPY
رنگ درمانی:
کروموتراپی
ترکیبی از رنگ و نور

THERMOWOOD
چوب ترمو فنلاند:
ترکیب چوب با
تکنولوژی

H E A T E R
بخاری:
دمای آب گرمتر

D R Y R U N
سنسور کنترل سطح:
روشن شدن براساس
میزان حداکثر آب

LED LIGHT
چراغ ال ای دی:
ترکیب هفت رنگ نور

LOW NOISE
کم صدا:
کارکرد درست موتور

ANTI BACTERIAL
آنتی باکتریال:
ضد میکروب

M E D I C A L
هیدروتراپی:
بهبود گردش خون

BUBBLE BLOWER
حباب ساز:
تولید حباب از جت ها

AQUA JETS
جت های آب:
ماساژ درمانی

The combination of airPool and hydroPool. The best of both worlds: air jets in the base of the bath and water jets, depending on the model, in the back, at the .sides and/or in the foot area
The jets can be adjusted and used separately, for an all-round body massage that gently eases tensions and stimulates the circulation.

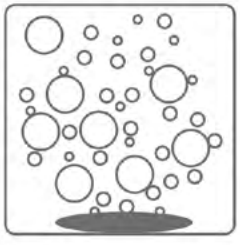

BUBBLE BLOWER

The air system for an invigorating massage. In the airPool, air is injected into the bath through special jets and dispersed as fine bubbles. These air jets are located in the base and ensure a stimulating massage.

AQUA JET

The water system for targeted body massage. The water is extracted and pumped back into the bath through
water jets The hydroPool massage jet stimulates muscles and local metabolism.The water system for targeted body massage. The water is extracted and pumped back into the bath through.

COLOR THERAPY

Experience Color and Light Therapy in Your Hot Tub Spa
Color therapy, or chromotherapy, uses a combination of color and light to balance a person's physical, emotional, spiritual, or mental energy.

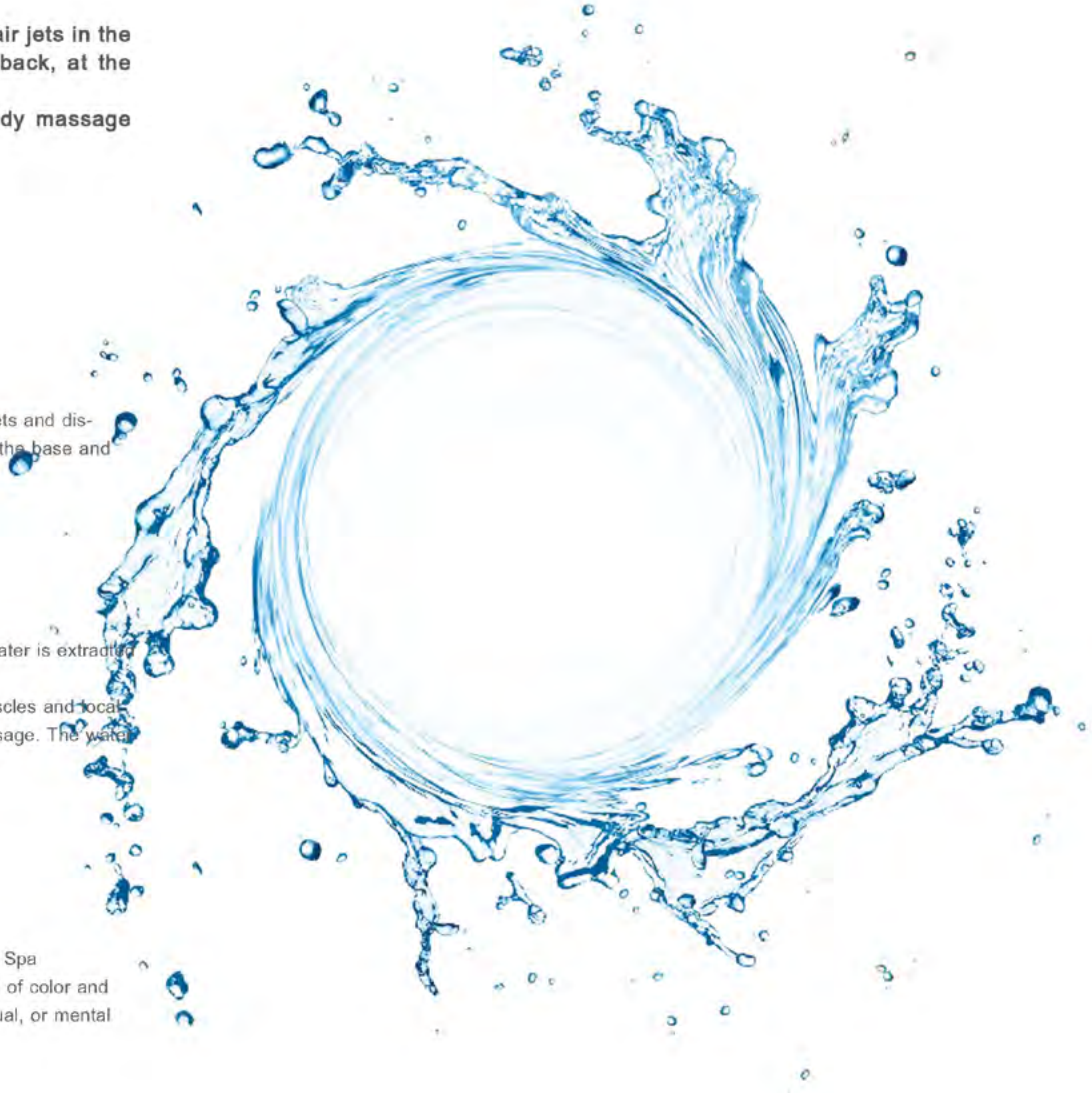

Model:

ROCK

Code: LRJ01

Scaling:

150×75×60
160×70×60
170×70×60
170×75×60
180×85×68

Left & Rhight

THE UNIQUE NATURE OF THE JACUZZI DESIGN

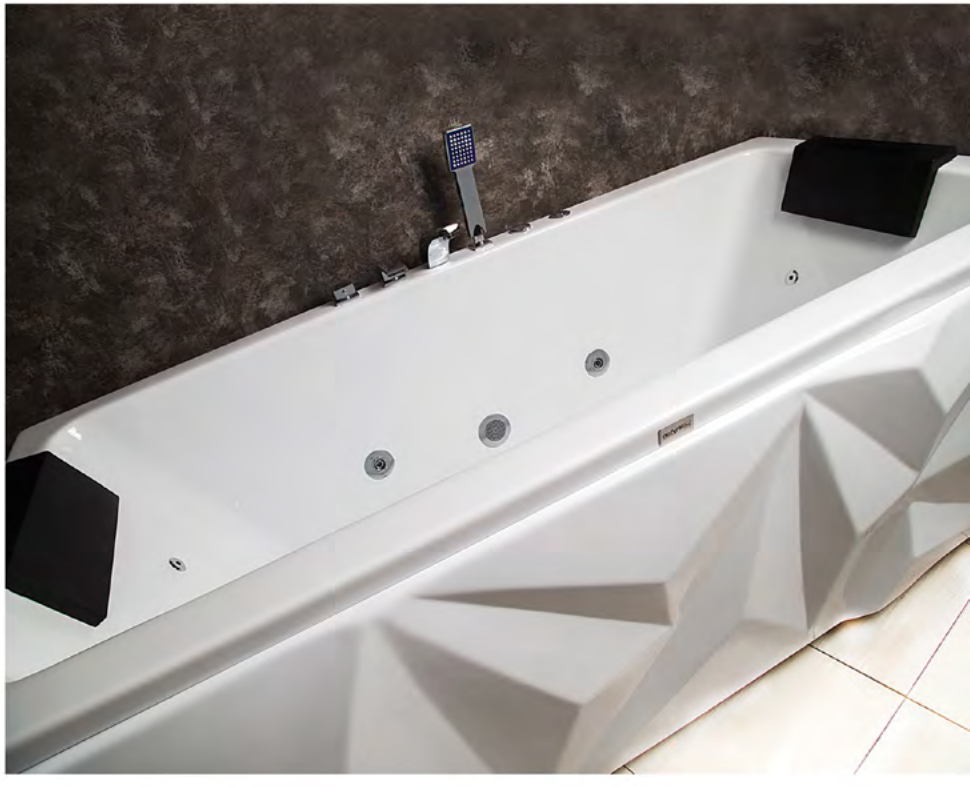

The jets and the power

The pump drives the hydromassage system and must have sufficient power to ensure continuous water circulation in an energetic and controlled way. This is why the Jacuzzi jets are so powerful and beneficial.

Ideal depth

The internal depth of the bath is essential to ensure the proper execution of the hydromassage, which is why Jacuzzi baths, thanks to clever ergonomics, have the ideal depth to immerse the body completely without using excessive amounts of water.

Model

ROCK

Code: LRJ01T

Scaling:

170×75×60

Left & Rhight

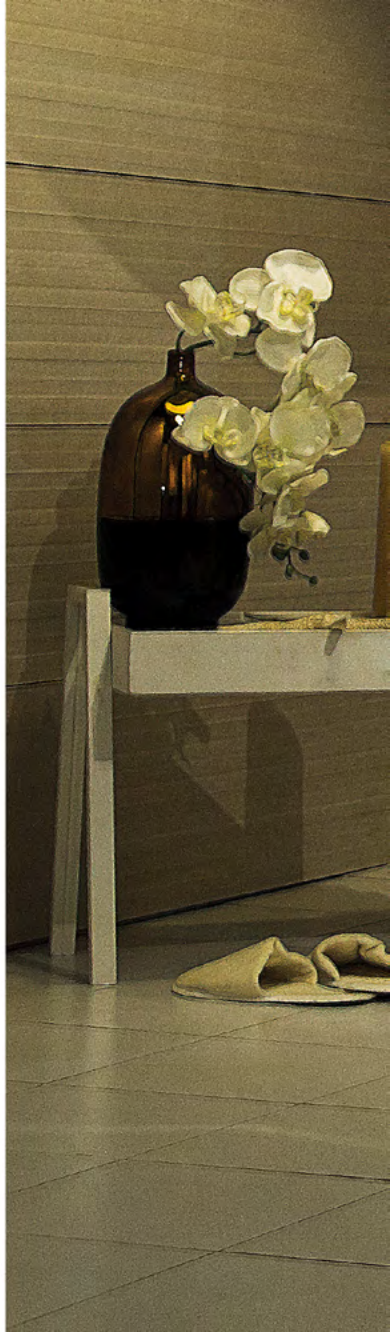

THE UNIQUE NATURE OF THE JACUZZI DESIGN

Model
DIAMOND
Code: LRJ02

Scaling:

Width	180 cm
length	85 cm
Height	68 cm

Left & Rhight

legs - feet

It is difficult to imagine the levels of stress, load and tension our feet and ankles are subjected to every day. Every step, every flight of stairs, all the loads we carry, put pressure on this area of our body.
Moreover, the soles of the feet are connected, by extension, to the entire body. The two Jacuzzi jets positioned at the height of the feet, not only restore strength and relieve fatigue, but reactivate the blood flow and stimulate a beneficial flow of energy throughout the body.

THE BEST RAW MATERIALS TOGETHER WITH AVANTGUARD TECHNOLOGIES

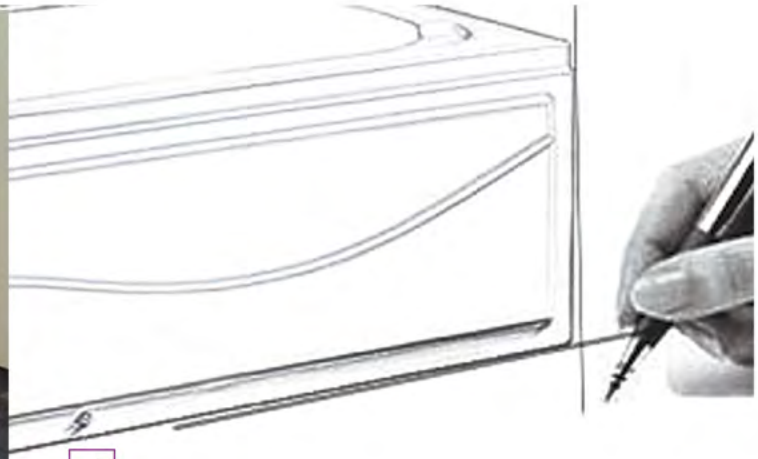

Model

POLARIS

Code: LRJ03

Scaling:

150×75×60
170×75×60

Left & Rhight

A beautiful experience in every sense

A perfect synthesis of shape and functionality Energy offers everyone the perfect experience of the authentic, deep, beneficial Jacuzzi hydromassage for areas of the body, aimed at the back, legs and feet. The jets are adjustable through °15 to get the maximum benefit. The internal comfort is the result of clever ergonomics, the headrest is comfortable and welcoming.

Model

CROCK+

Code: LRJ04

Scaling:

140×70×60
160×70×60
170×70×60
180×85×60

Left & Rhight

A beautiful experience in every sense

The underwater light helps to make the environment more harmonious, giving the emotion of light to the shiatsu hydromassage moment.

Model

ANTONY

Code: LRJ05

Scaling:

Width	181 cm
length	87 cm
Height	70 cm

Left & Rhight

You're looking for top class comfort as well as timeless design for your second bathroom? Then you're going to be delighted by Denver, a bathroom collection with lots of clever functional features for more comfort.

Model
DENVER
Code: LRJ06

Scaling:

Width	170 cm
length	85 cm
Height	70 cm

Left & Rhight

Model

RIO

Code: LRJ07

Scaling:

Width	170 cm
length	85 cm
Height	70 cm

Left & Rhight

Model
VOLGA
Code: LRJ08

Scaling:

Width	170 cm
length	85 cm
Height	70 cm

Left & Rhight

Model

GAMA

Code: LRJ09

Scaling:

150×80×60
160×80×60

Left & Rhight
Aquarium
Handle color

CUZZI EXPERIENCE KNOWING
ERS HAVE BLENDED
OTHERAPY WITH THE
NIC DESIGN.

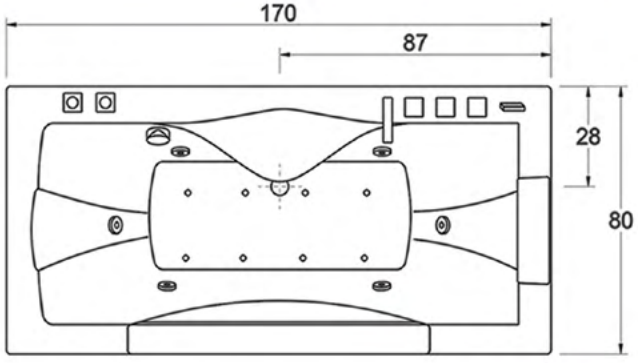

Model

GAMA+

Code: LRJ10

Scaling:

Width	170 cm
length	75 cm
Height	60 cm

Left & Rhight
Aquarium

Model

DIMEN

Code: LRJ11

Scaling:

Width	160 cm
length	80 cm
Height	55 cm

Left & Rhight Aquarium Handle color

THE IDEAL DESIGN FOR ANY TYPE OF ENVIRONMENT THANKS TO ITS CUSTOMISABLE LOOK

Model

STAR

Code: LRJ22

Scaling:

Width	150 cm
length	150 cm
Height	65 cm

Left & Rhight Aquarium Handle color

FROM THE PRODUCT TO THE FINAL PACKING, EVERY STEP WITH METICULOUS ATTENTION TO EVERY DETAIL.

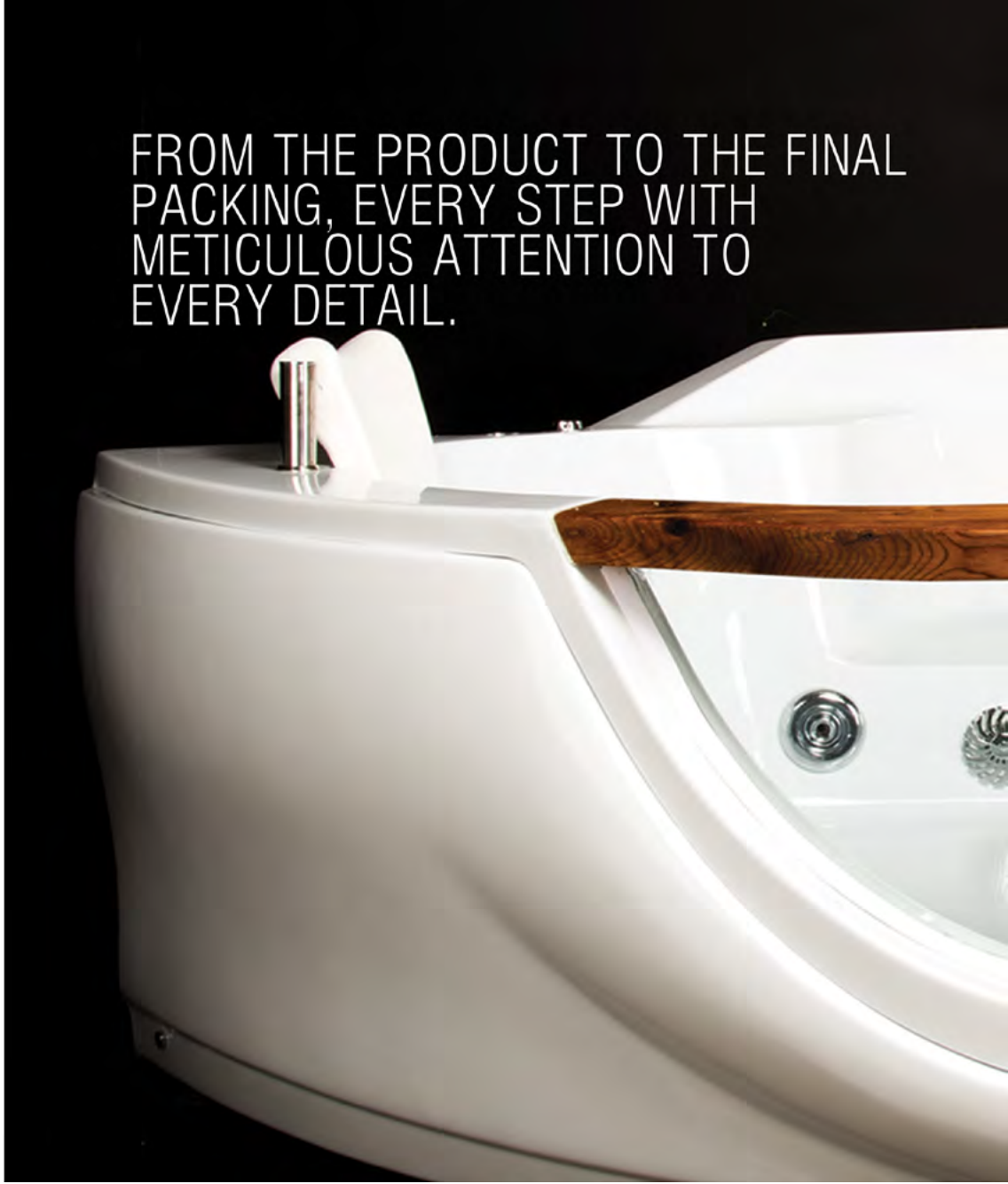

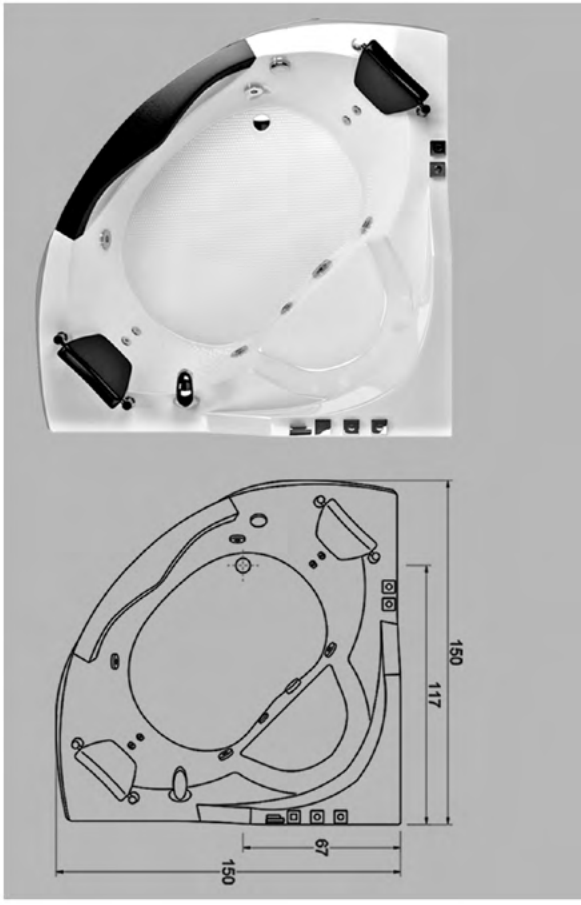
150
117
67
150

Enjoy the confidence in a reliable brand and the assurance that comes from having the service and qualities of a strong partner at your side for many years to come.

Model:

STAR+

Code: LRJ13

Scaling:

Width	150 cm
length	150 cm
Height	65 cm

Left & Rhight
Aquarium

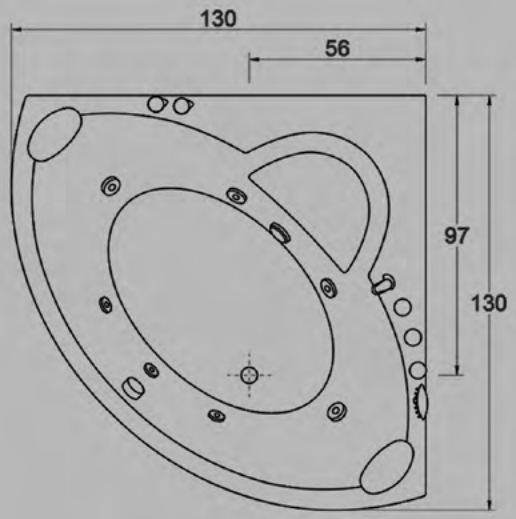

Model:

LUNA

Code: LRJ14

Scaling:

120×120×65
130×130×65

Corner
Left & Rhight

Model:

KARNAVAL

Code: LRJ16

Scaling:

Width 120 cm
length 120 cm
Height 60 cm

Width 140 cm
length 140 cm
Height 65 cm

Corner
Left & Rhight

Model:

KARNAVAL

Code: LRJ15

Scaling:

Width	150 cm
length	150 cm
Height	65 cm

Corner
Handle
Left & Rhight

Model:
MONACO
Code: LRJ17

Scaling:

Width	165 cm
length	87 cm
Height	66 cm

Handle
Left & Rhight

Model:
ARNO
Code: LRJ18

Scaling:

Width	160 cm
length	90 cm
Height	58 cm

Left & Rhight

Model:
RAYKA
Code: LRJ20

Scaling:

160×80×65
170×80×65

Left & Rhight

Model:
RHINE
Code: LRJ21

Scaling:

Width	150 cm
length	85 cm
Height	63 cm

Left & Rhight

Model:
BADIS
Code: LRJ22

Scaling:

Width	120 cm
length	70 cm
Height	60 cm
Width	130 cm
length	70 cm
Height	60 cm

Left & Rhight

Model:

ARGO

Code: LRJ24

Scaling:		Scaling:	
Width	150 cm	Width	170 cm
length	70 cm	length	70 cm
Height	57 cm	Height	57 cm

Left & Rhight

Model:

VENOS+

Code: LRJ25

Scaling:

Width	170 cm
length	70 cm
Height	58 cm

Left & Rhight

Model:

GOCHIC

Code: LRJ23

Scaling:

Width	180 cm
length	80 cm
Height	70 cm

Model:

MAROON

Code: LRJ27

Scaling:

Width	170 cm
length	120 cm
Height	70 cm

Left & Rhight

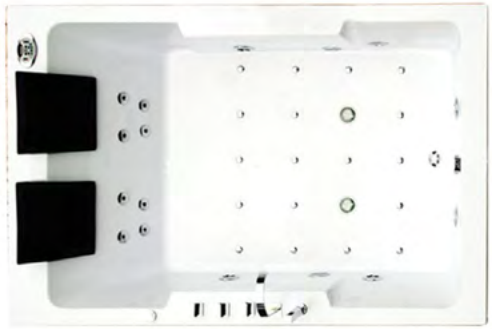

PERFORMANCE: CONTINUOS TECHNICAL INNOVATION AND PERFOMANCE THAT ENSURE A POSITIVE EXPERIENCE

Model:

SIDE

Code: LRJ26

Scaling:

Width	170 cm
length	120 cm
Height	65 cm

Left & Rhight

Model:

MAROON

Code: LRJ28

Scaling:		Scaling:	
Width	180 cm	Width	220 cm
length	170 cm	length	180 cm
Height	75 cm	Height	75 cm

Thermowood
Left & Rhight

THE PLEASURE OF A JACUZZI EVEN ON YOUR TERRACE AT HOME.

Elegance

The centre of attention. The sophistication and refinement of the Jacuzzi design is also found in the details and can be harmonised with any environment. The ergonomic shape of the baths are enhanced by the possibility of luxurious customisations with the highest quality materials.It is possible to choose from thermoo wood, in which an attractive luminous frame can be inserted.

PANELS

Prestigious materials. Jacuzzi comfort for all the senses and taking into account every detail. The whirlpool baths are beautiful and elegant and, depending on the model, the freestanding versions are finished with the highest quality, durable and non-deformable panelling made from exclusive materials: acrylic, wood.

A BEAUTIFUL EXPERIENCE IN EVERY SENSE

The perfection of the circle

For all-round wellness A true oasis of relaxation and beauty which becomes unique. Its soft and welcoming shape, its generous size, blend nature, technology and architecture.

Maximum comfort for head and neck All Nova baths are fitted with an exclusive headrest, made from exquisite material. This attractive combination of design and ergonomics is designed to fully accommodate the neck and give the bath a perfect aesthetic detail, which harmonises well with its shape and its large size.

Model:

OXIN

Code: LRJ30

Scaling:		Scaling:	
Width	140 cm	Width	160 cm
length	140 cm	length	160 cm
Height	65 cm	Height	70 cm

Thermowood
Left & Rhight

Model:
RSH03

Scaling:

100x80x205 cm

Model:
RSH04

Scaling:

120x80x205 cm

Model:
RSH05

Scaling:

90x90x202 cm

Model:
RSH01

Scaling:

90x90x200 cm
100x100x200 cm

Model:
RSH02

Scaling:

120x80x200 cm
120x90x200 cm

Scaling:

120x80x15 cm
120x90x15 cm

Scaling:

80x80x15 cm
90x90x15 cm

Scaling:

90x90x39 cm

Scaling:

80x80x15 cm
90x90x15 cm

Scaling:

120x80x15 cm
120x90x15 cm

THE BEST RAW MATERIALS TOGETHER WITH AVANTGUARD TECHNOLOGIES

Rhyton
Jacuzzi Bathtub Faucets

Office:

Unit#2
No.1462
Shariati St, . Gholhak
Tehran.Iran

Phone + 982122923936
Fax + 982126424972

Factory:

No.1314
Fanavaran Industrial Zone
Tehran.Iran

info@rhytonjacuzzi.com
sales@rhytonjacuzzi.com

For more information about Rhyton products visit:
www.rhytonjacuzzi.com

Rhyton_ jacuzzi